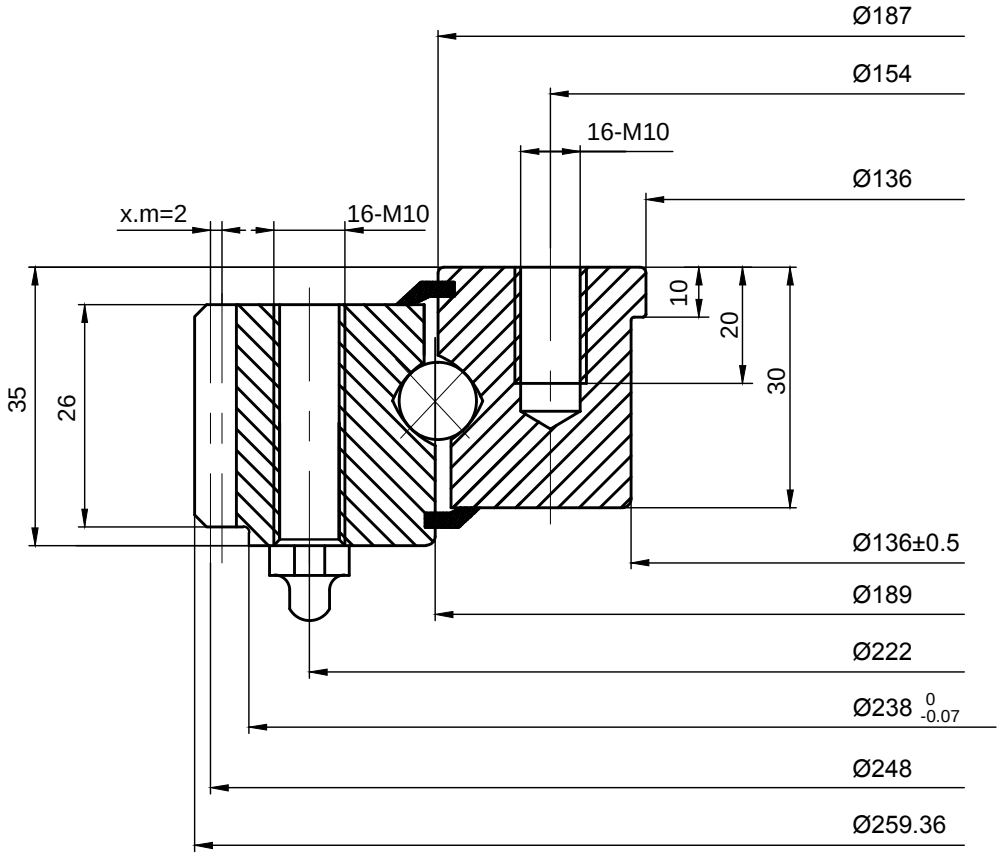

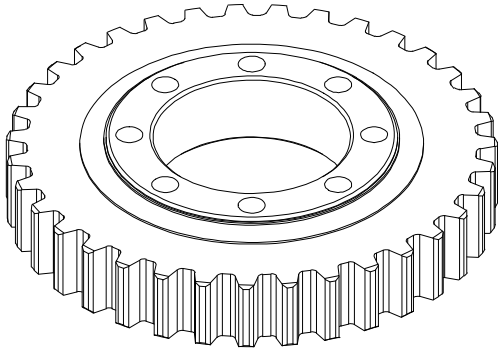

LILY® SHANGHAI LILY BEARING LIMITED
https://www.lily-bearing.com/

SERIES VA SLEWING BEARINGS	PART NUMBER VA140188-V