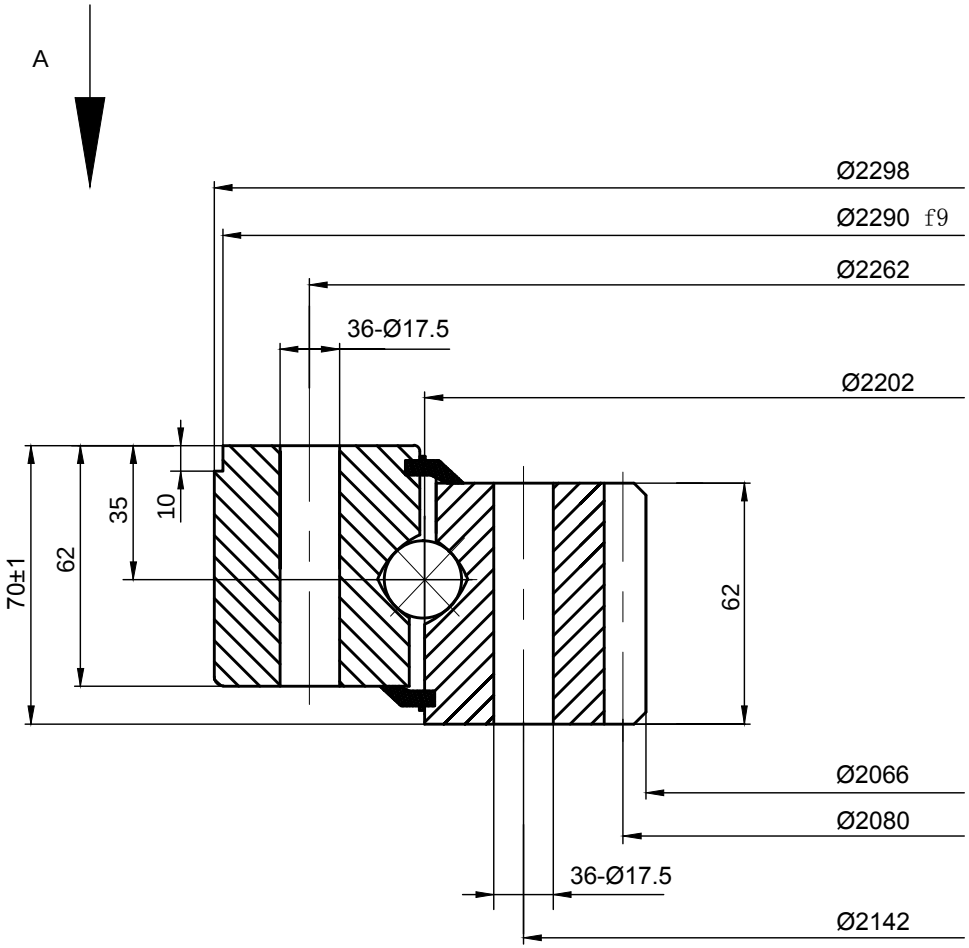

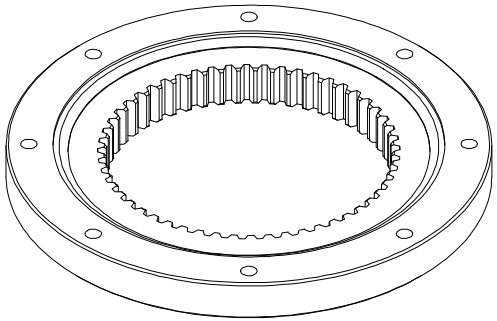

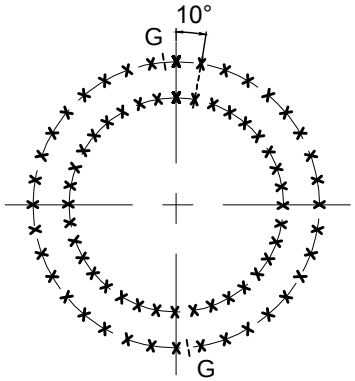

Lmplantation suivant A
Lmplantation according to A
Ansicht nach A

LILY® SHANGHAI LILY BEARING LIMITED https://www.lily-bearing.com/	
SLEWING BEARINGS	PART NUMBER 02 2202 00