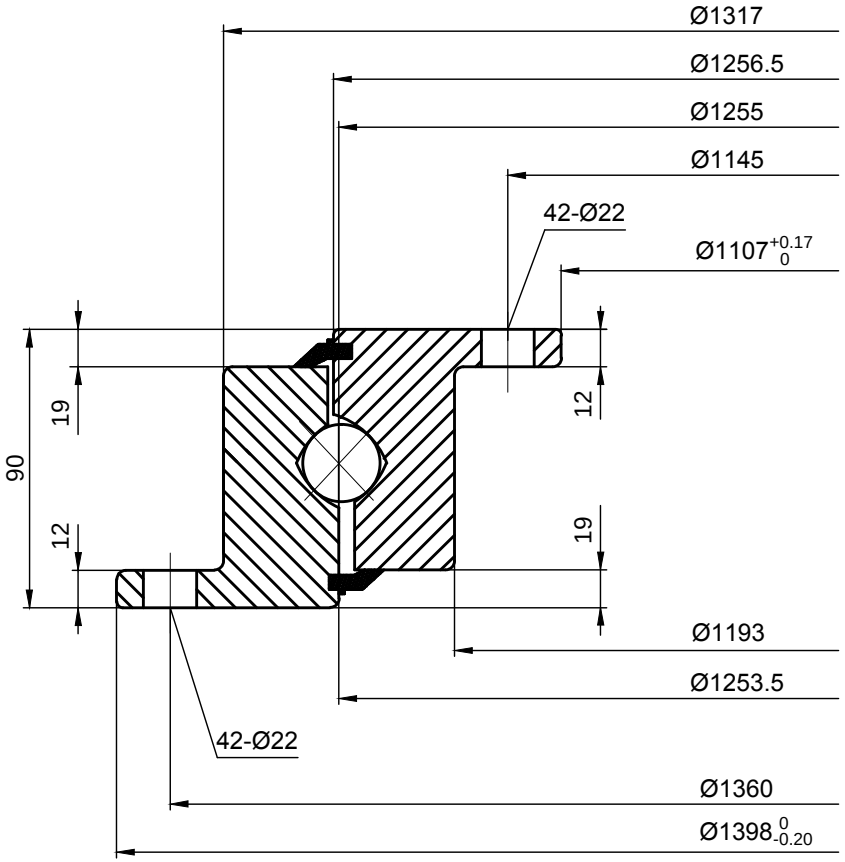

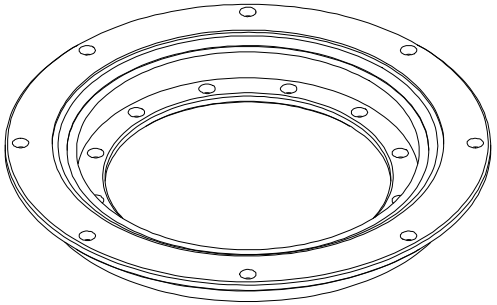

LILY® SHANGHAI LILY BEARING LIMITED
https://www.lily-bearing.com/

SERIES KD 210 SLEWING BEARINGS	PART NUMBER 280.30.1275.013 Typ 110/1400.0