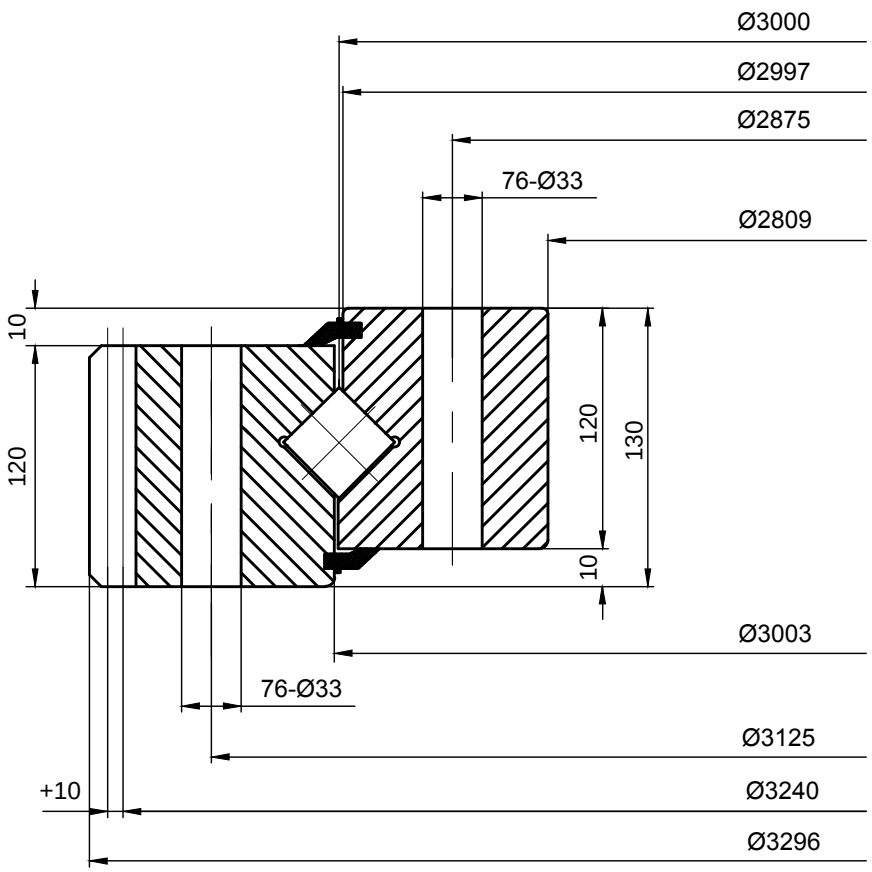

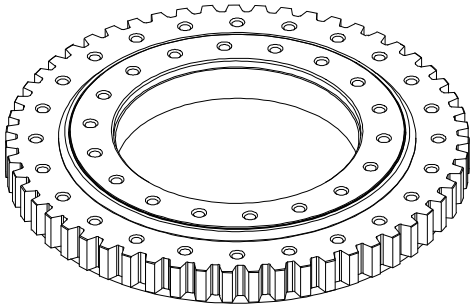

LILY® SHANGHAI LILY BEARING LIMITED
https://www.lily-bearing.com/

SERIES RD 800 SLEWING BEARINGS	PART NUMBER 161.50.3000.891.41.1503