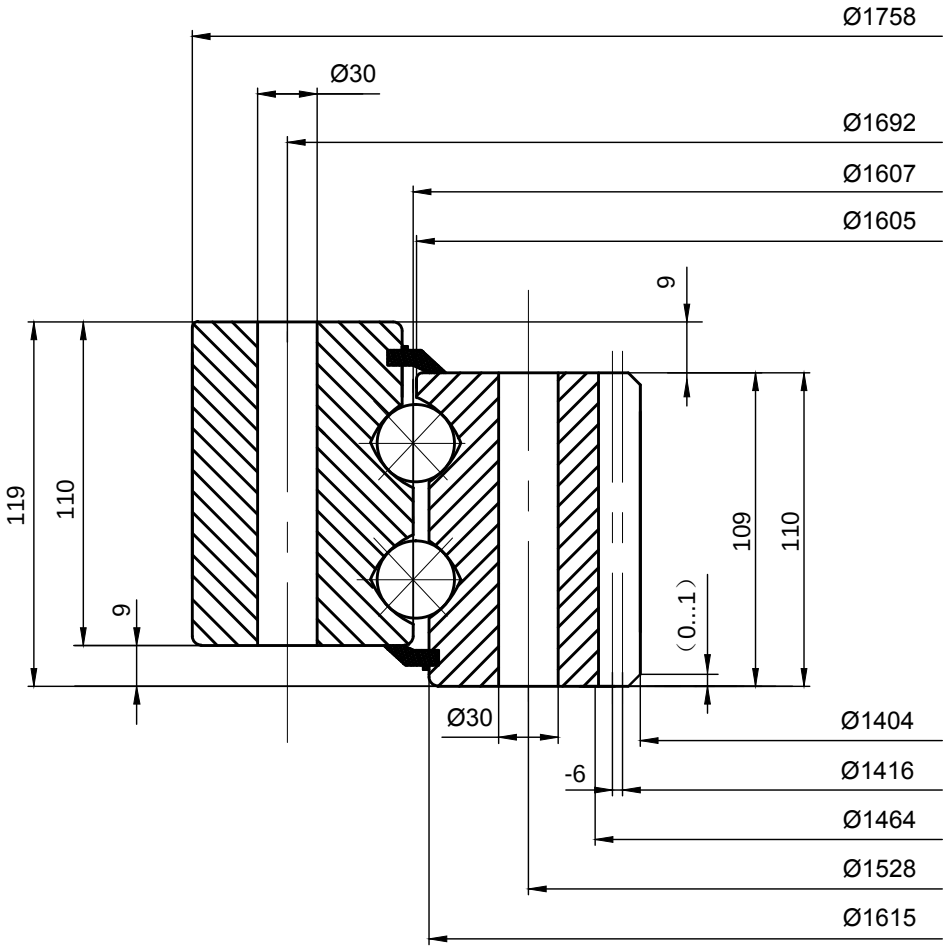


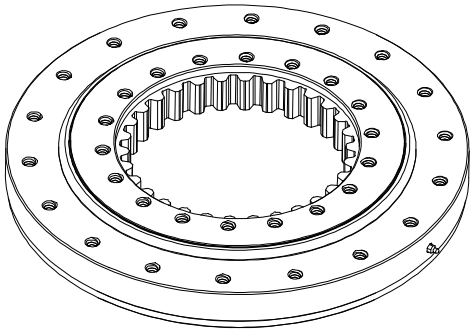

LILY® SHANGHAI LILY BEARING LIMITED
https://www.lily-bearing.com/

| | |
|---|---|
| SERIES 09<br>SLEWING BEARINGS | PART NUMBER<br>092.30.1607.991.21.1502 |