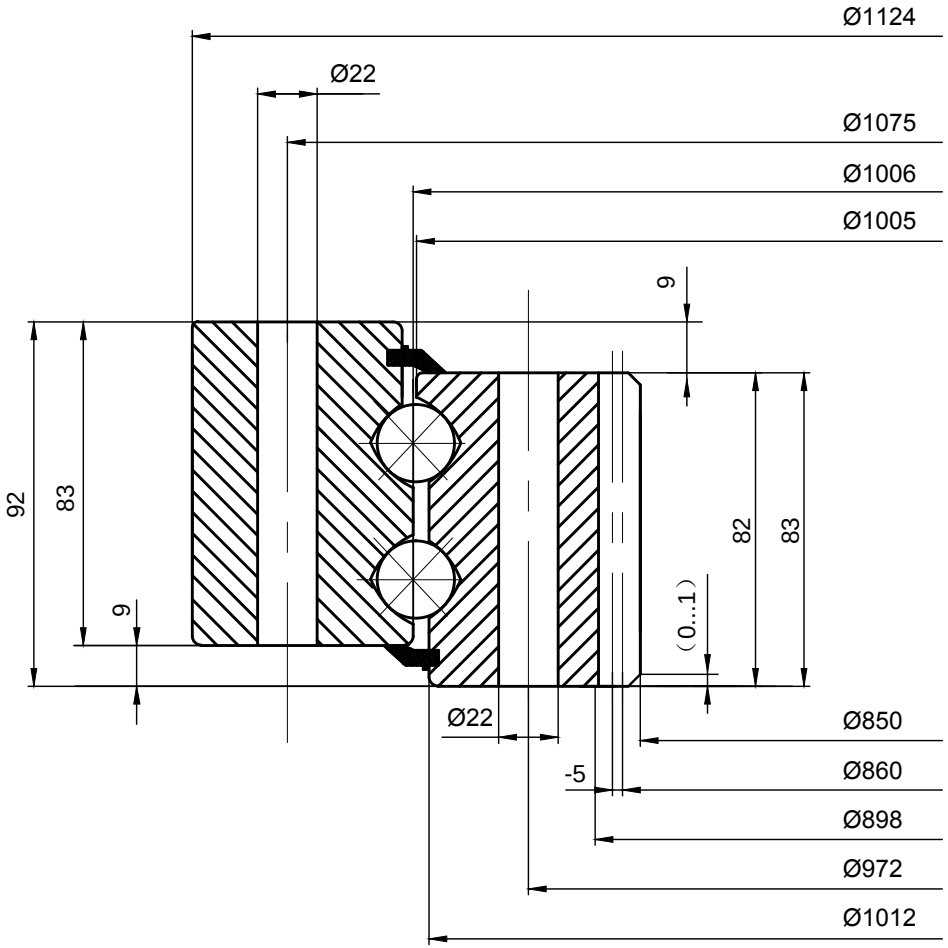

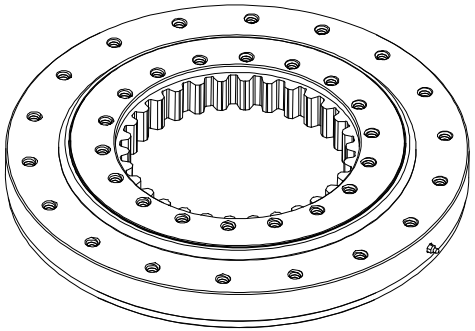

LILY® SHANGHAI LILY BEARING LIMITED
https://www.lily-bearing.com/

SERIES 09 SLEWING BEARINGS	PART NUMBER 092.20.1006.991.21.1503