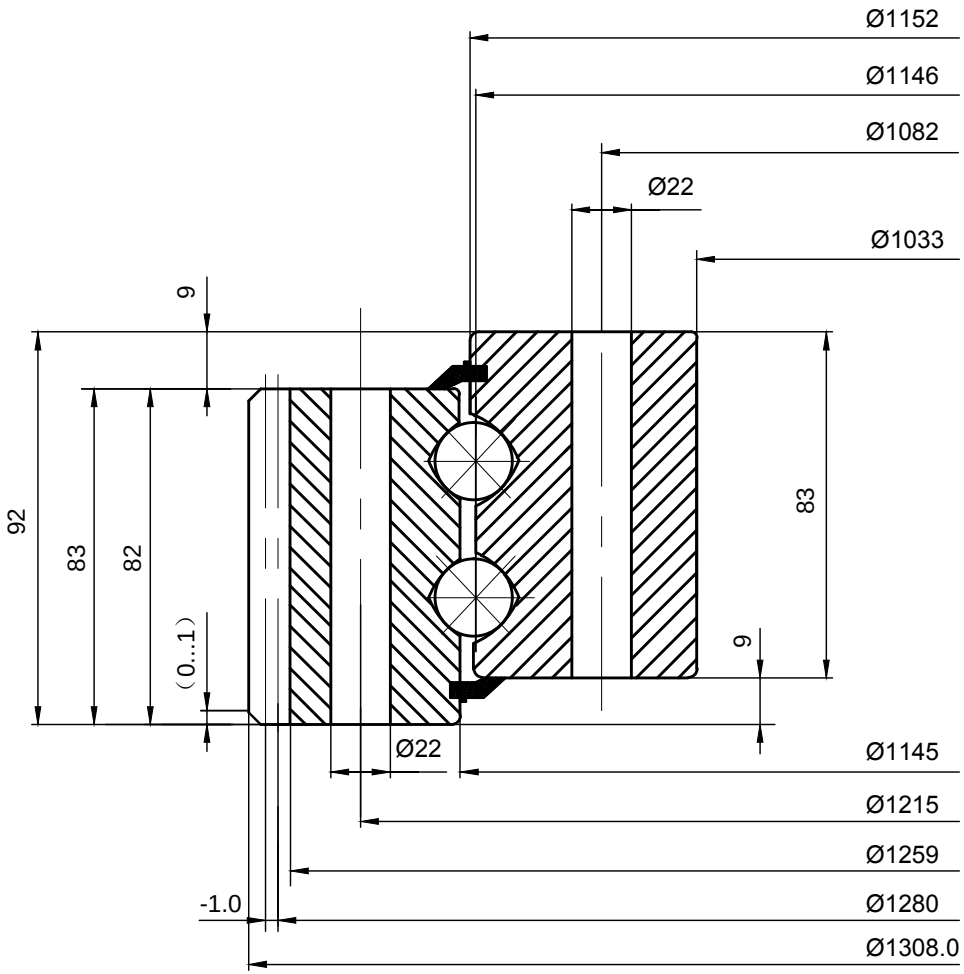

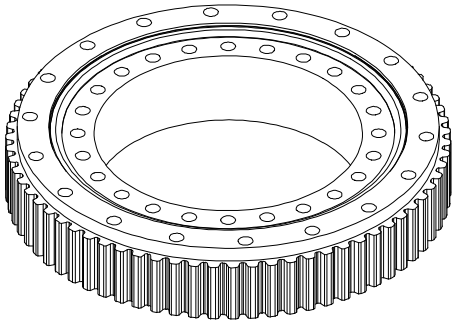

LILY® SHANGHAI LILY BEARING LIMITED
https://www.lily-bearing.com/

SERIES 09 SLEWING BEARINGS	PART NUMBER 091.20.1146.990.11.1503