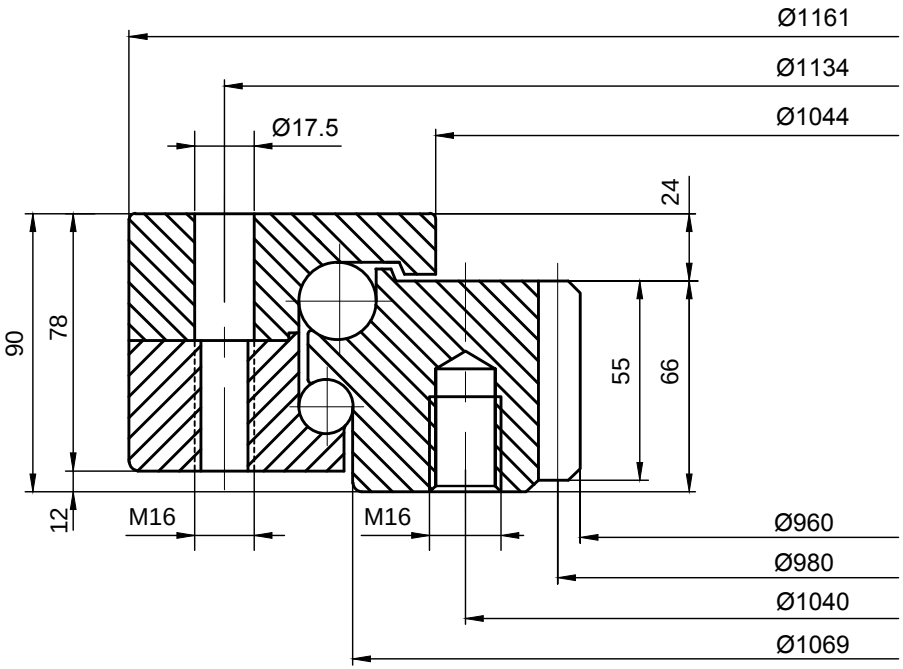

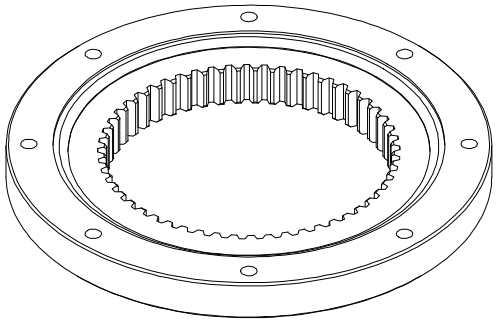

LILY® SHANGHAI LILY BEARING LIMITED
https://www.lily-bearing.com/

STANDARD SERIES KD 320 SLEWING BEARINGS	PART NUMBER 012.20.1085.001.21.1504