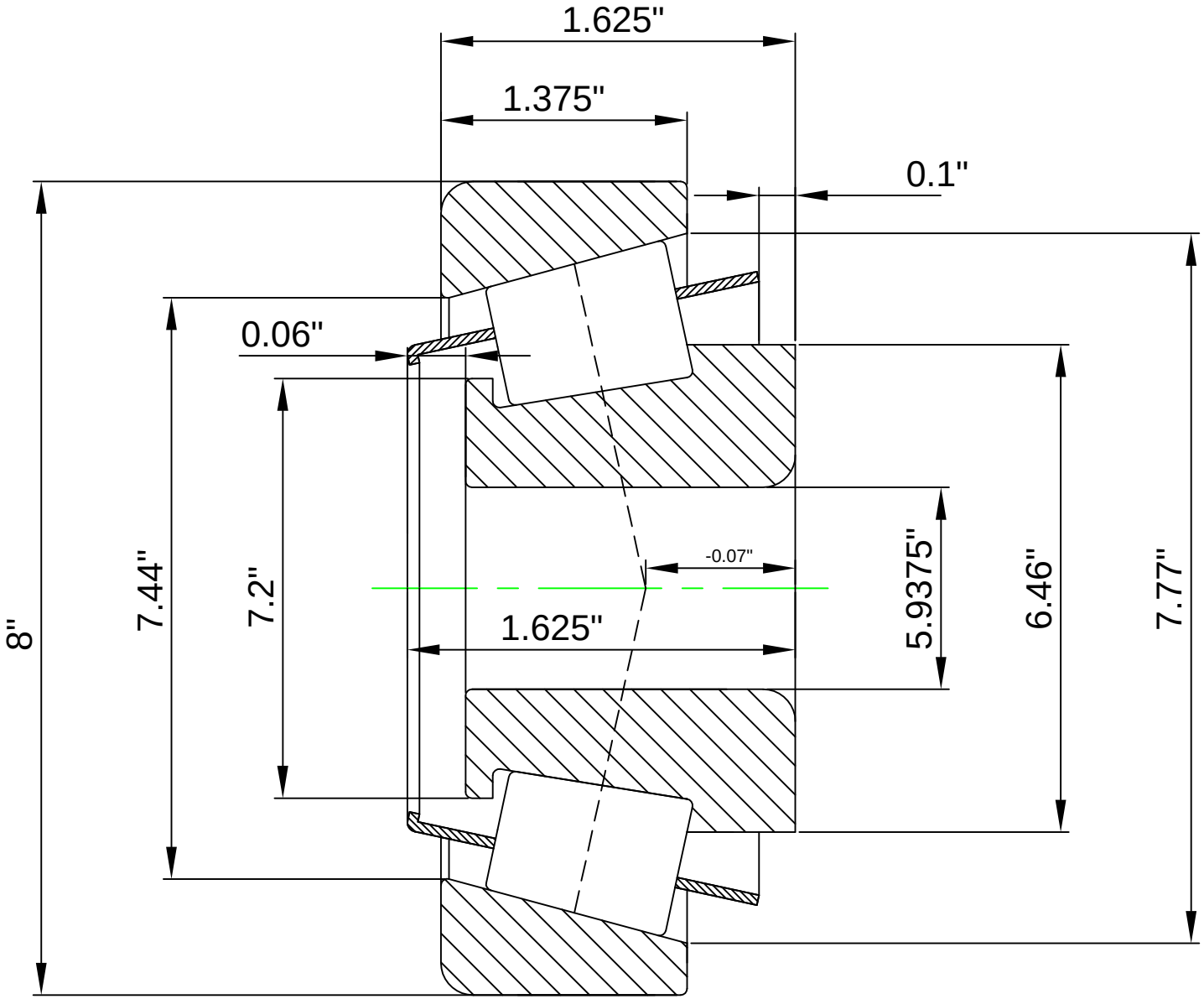

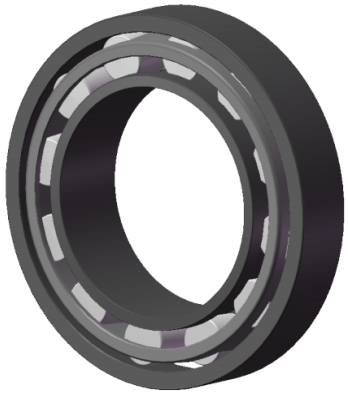

LILY®	SHANGHAI LILY BEARING LIMITED Email: lilybearing@lily-bearing.com
Part Number	TS SERIES LM330446-LM330410(Tapered Single Roller Bearings)