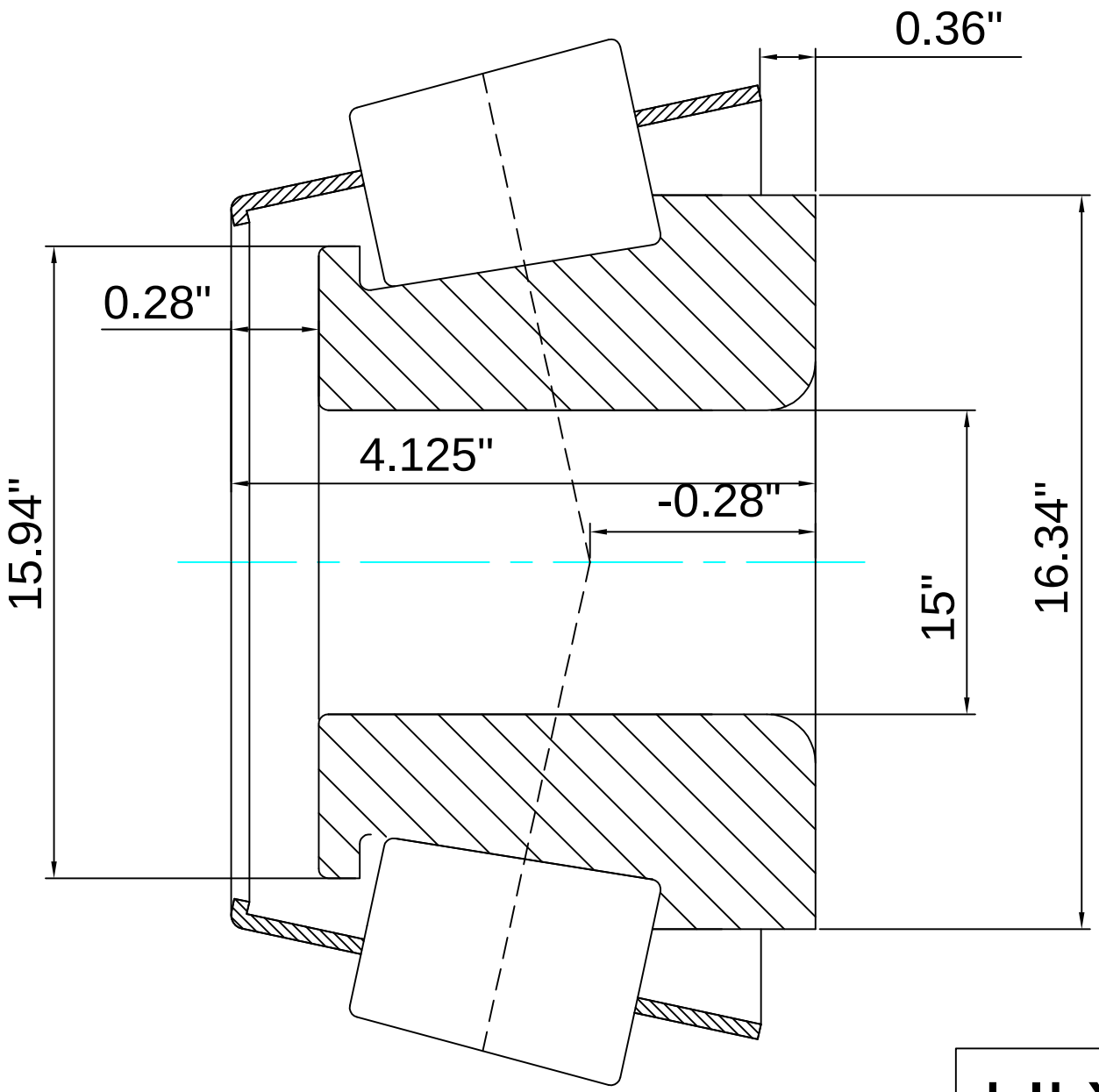

LILY®	SHANGHAI LILY BEARING LIMITED Email: lilybearing@lily-bearing.com
Part Number	HM266446 (Single Cones - Imperial)