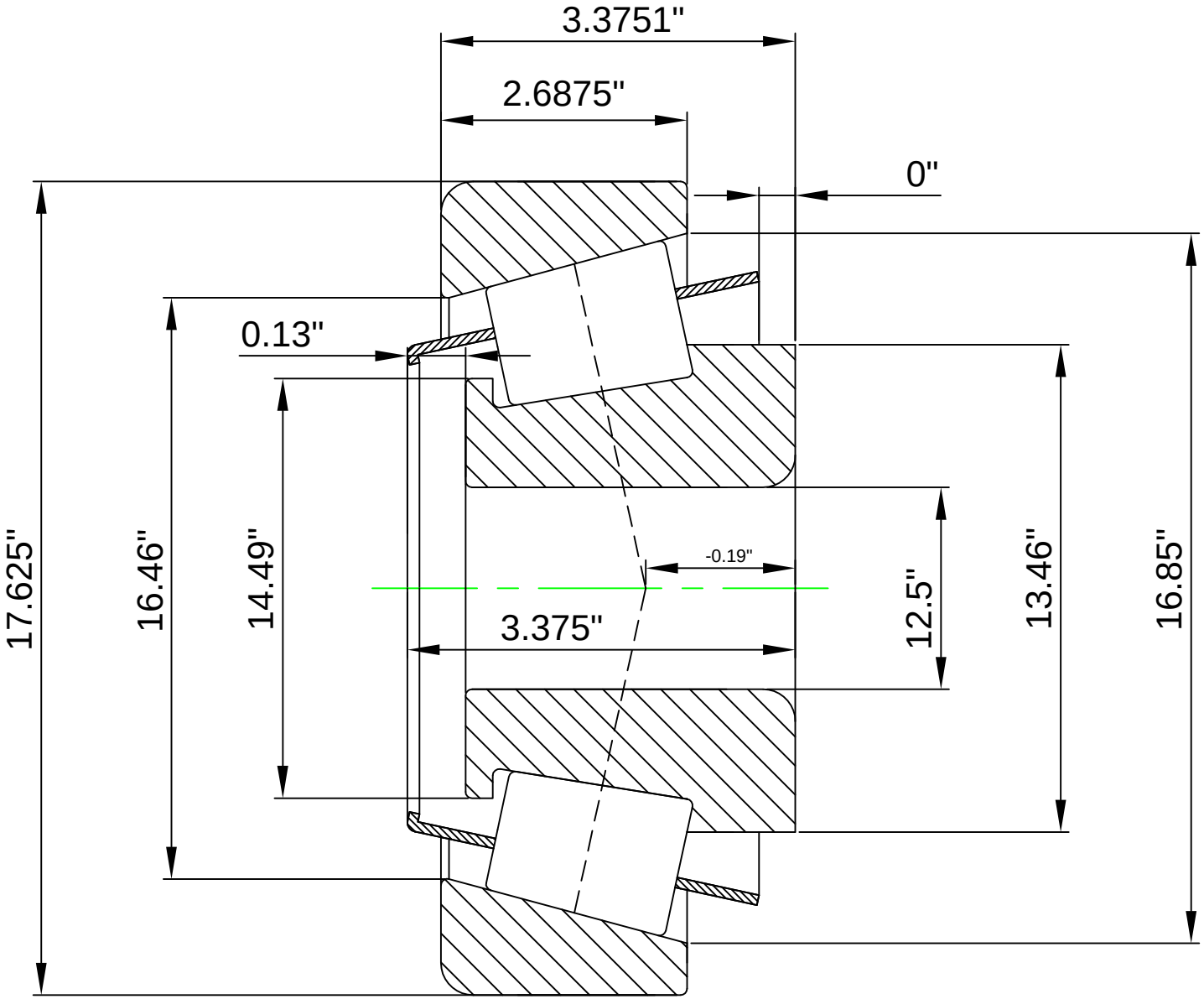

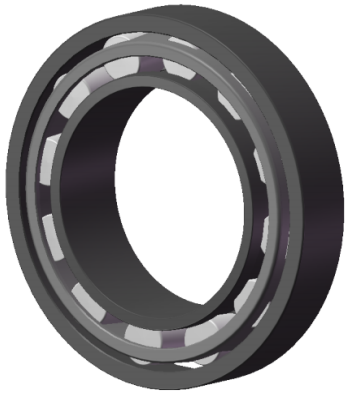

LILY®	SHANGHAI LILY BEARING LIMITED Email: lilybearing@lily-bearing.com
Part Number	TS SERIES HM259049H-HM259010(Tapered Single Roller Bearings)