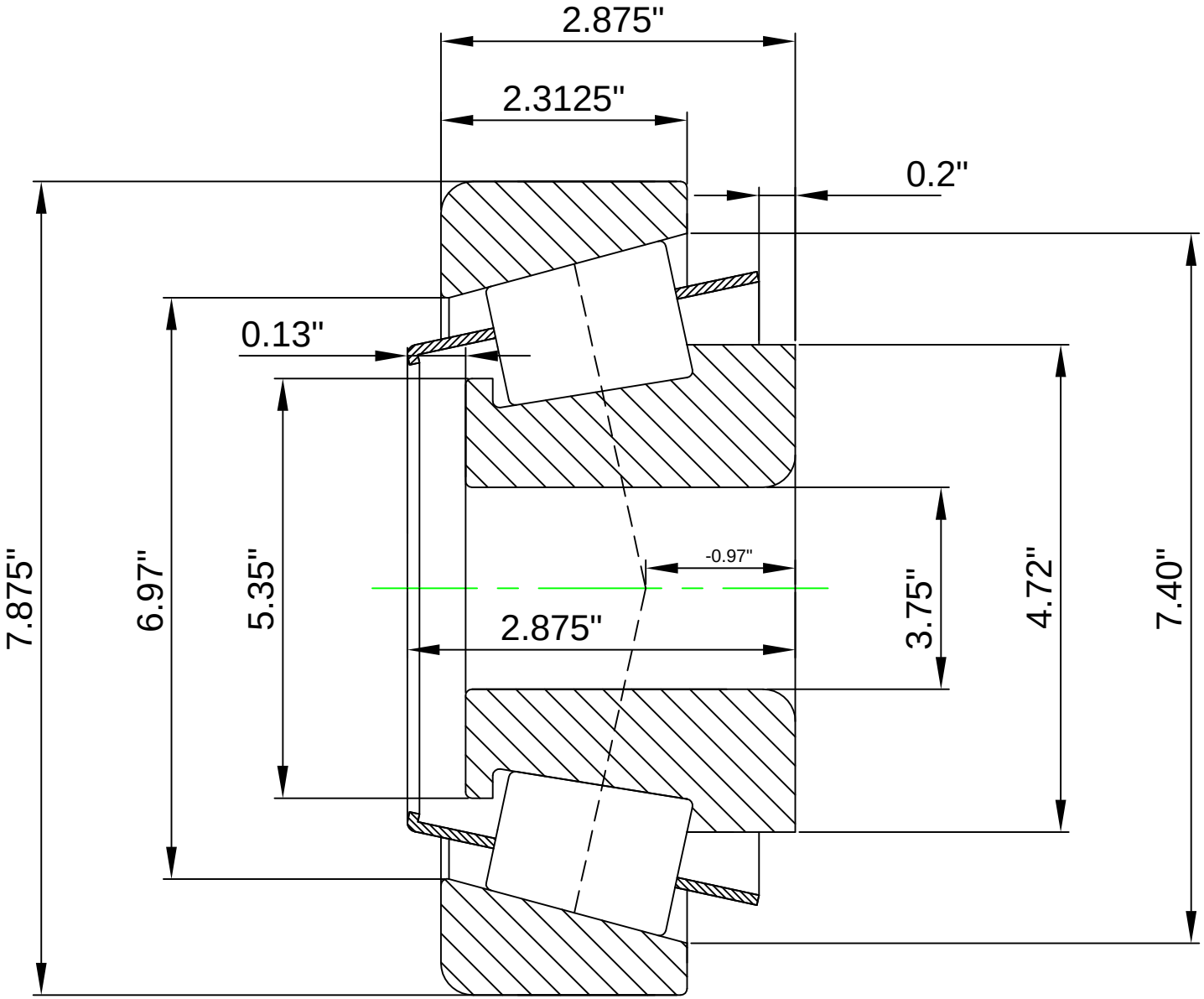


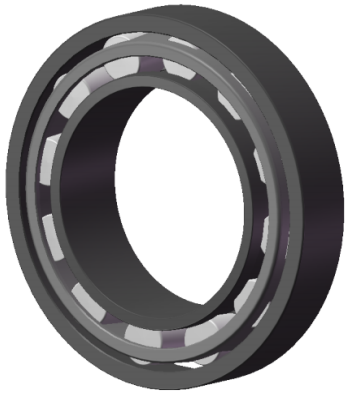

| | |
|---|---|
| LILY® | SHANGHAI LILY BEARING LIMITED<br>Email: lilybearing@lily-bearing.com |
| Part Number | TS SERIES<br>EH220749-EH220710(Tapered Single Roller Bearings) |