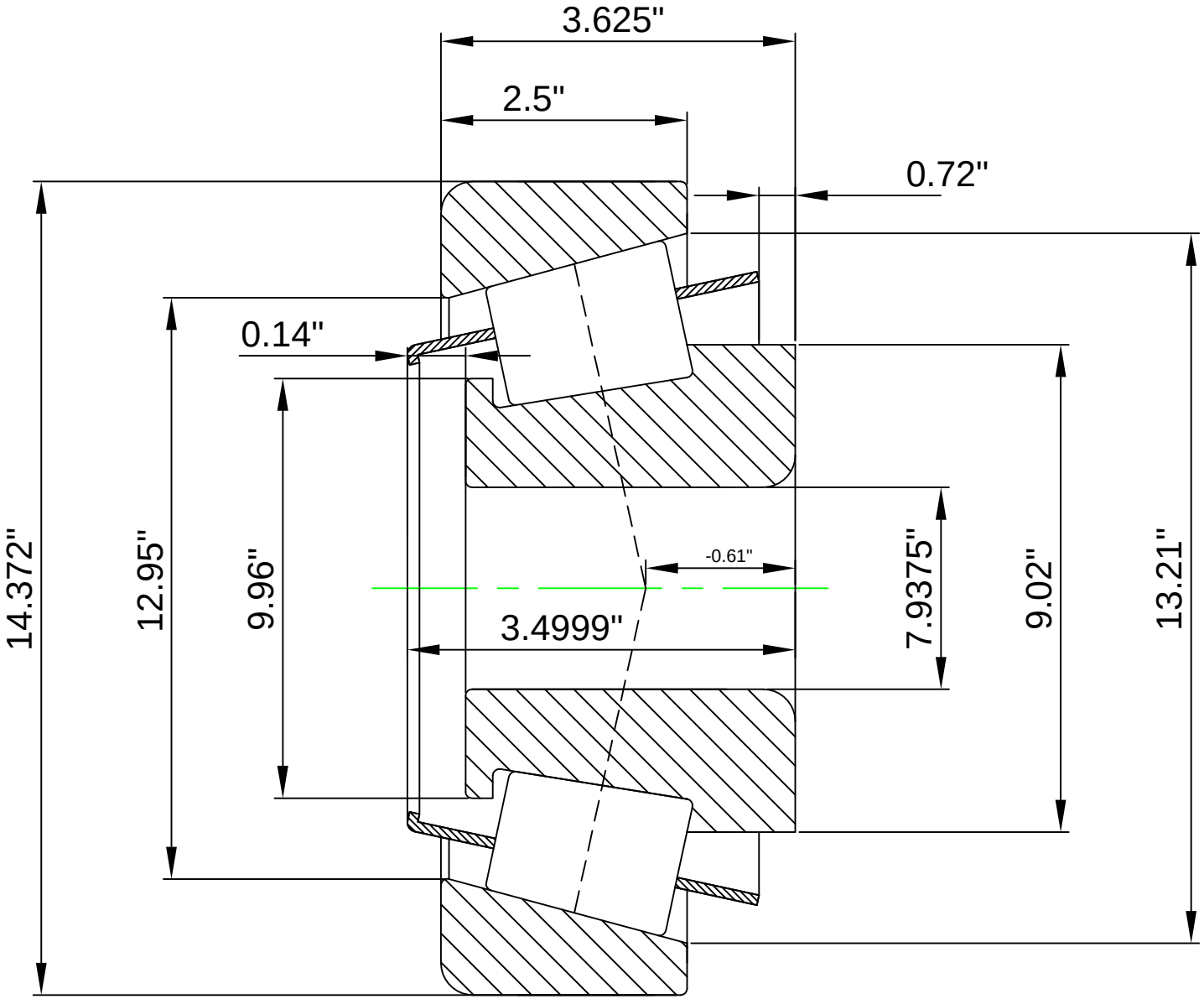

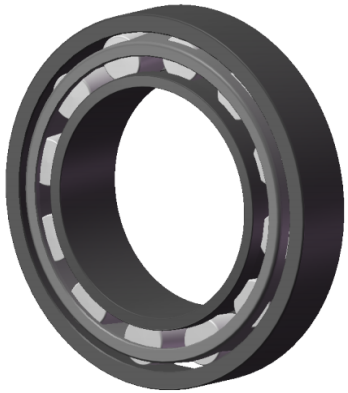

LILY®	SHANGHAI LILY BEARING LIMITED Email: lilybearing@lily-bearing.com
Part Number	TS SERIES EE420793W-421437(Tapered Single Roller Bearings)