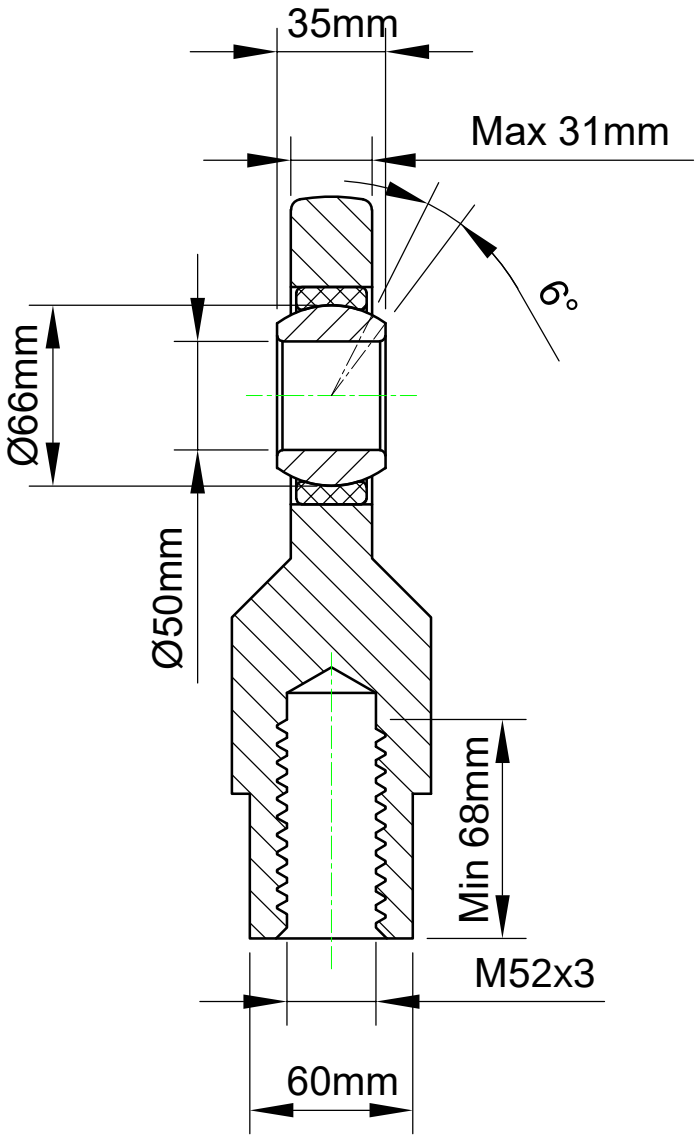

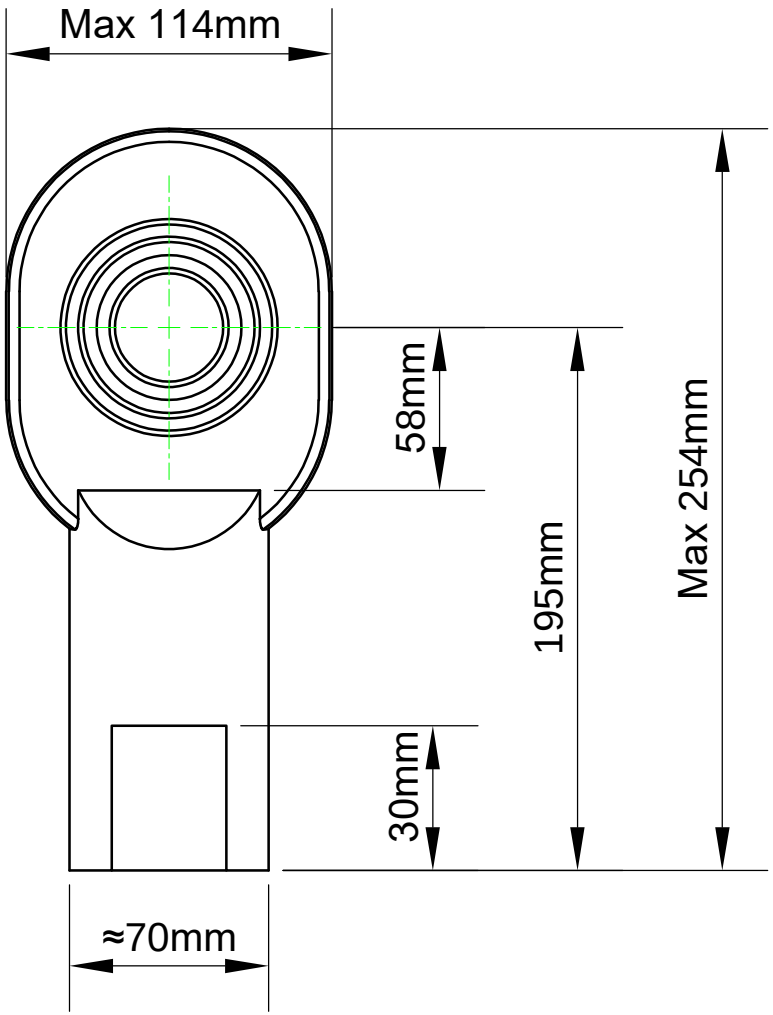

LILY®	SHANGHAI LILY BEARING LIMITED Email: lilybearing@lily-bearing.com
Part Number	SIL 50 TXE-2LS Spherical Plain Bearing