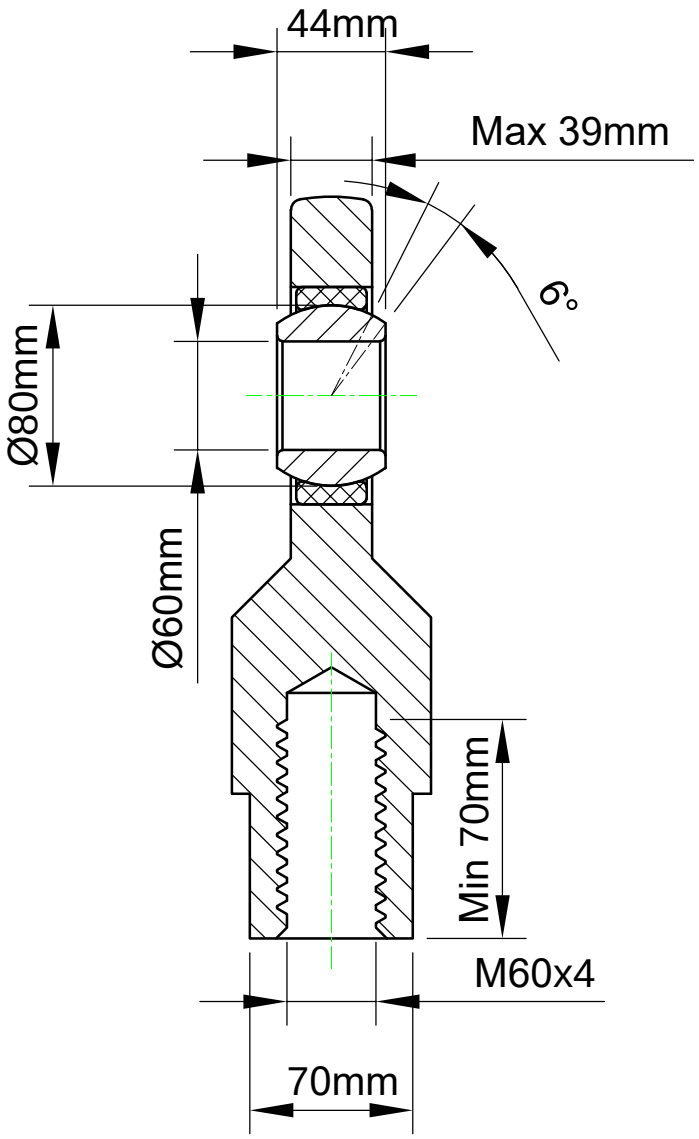

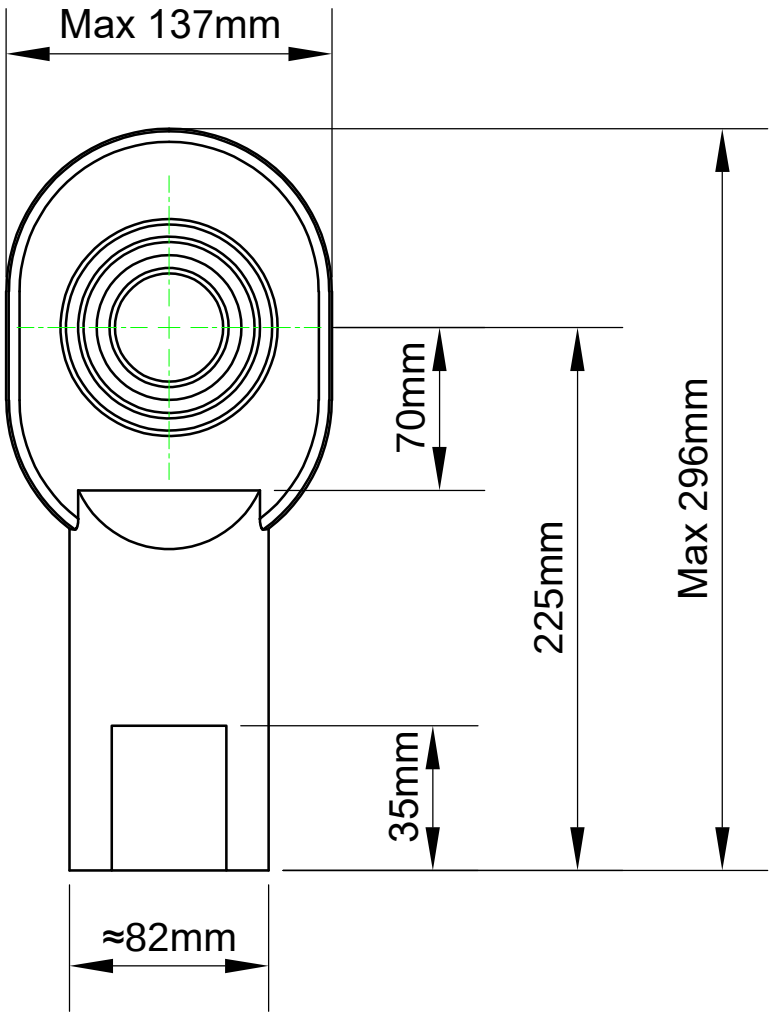

LILY®	SHANGHAI LILY BEARING LIMITED Email: lilybearing@lily-bearing.com
Part Number	SI 60 ES-2RS Spherical Plain Bearing