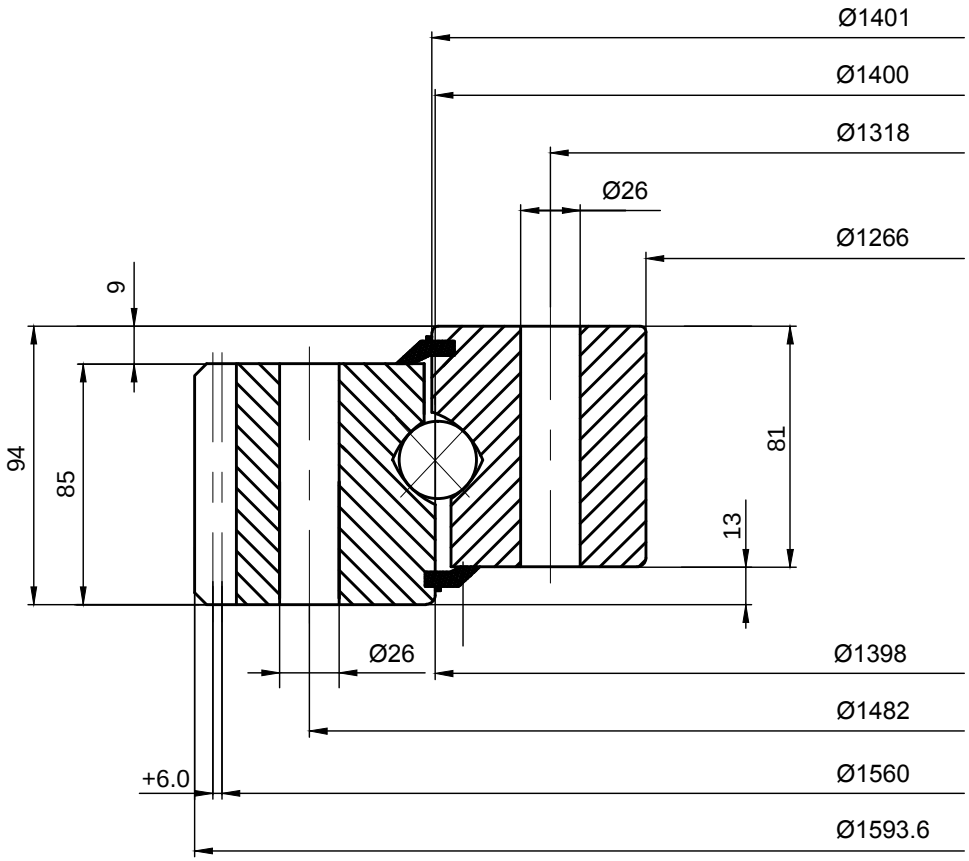


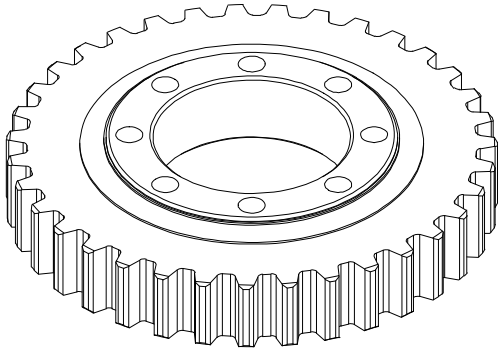

LILY® SHANGHAI LILY BEARING LIMITED
https://www.lily-bearing.com/

| | |
|---|---|
| SERIES 06<br>SLEWING BEARINGS | PART NUMBER<br>061.40.1400.001.29.1504 |